BODY, FLOOR PANELS, UNDERSEAT - Z26SPD92AN/AH/BN/BH (C750238)

2026 RZR - RZR PRO S ULTIMATE (R01) - Z26SPD92AN/AH/BN/BH

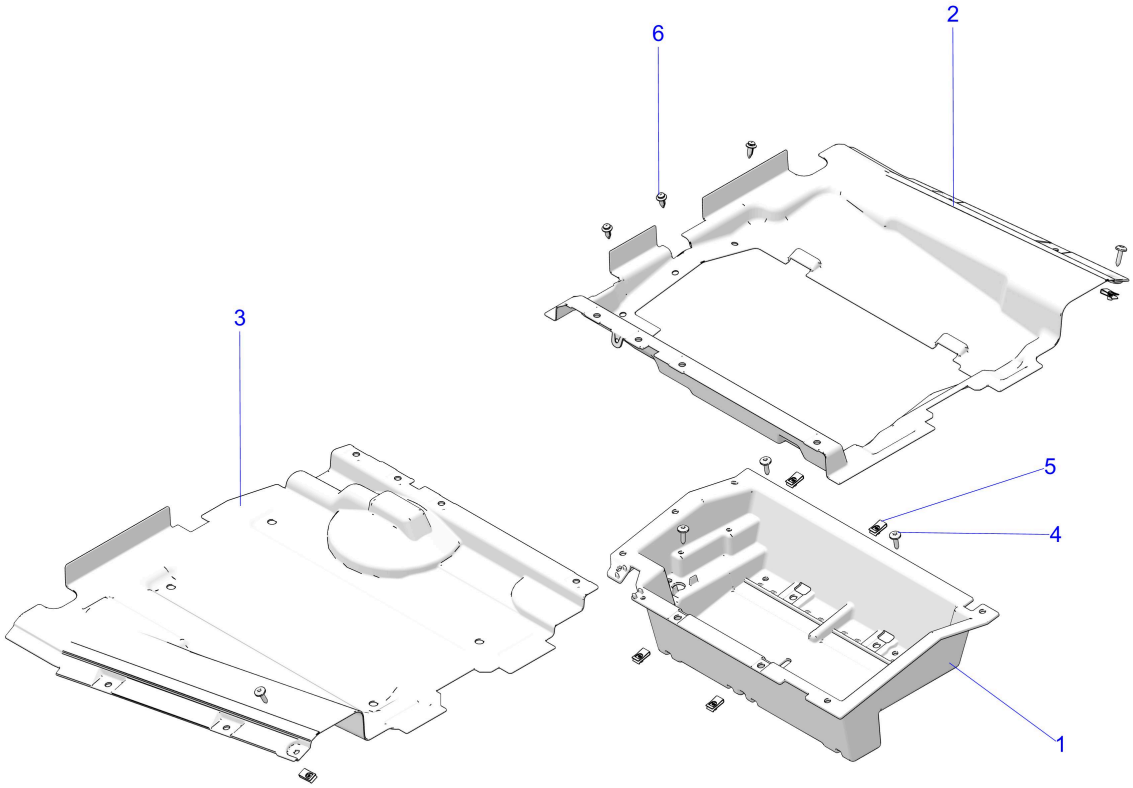

© 2023 Polaris Industries Inc. C750238

Reference #	*Part#*	*Description*	*Quantity*
1	5455496-070	TRAY-BATTERY,BLK	1
2	5456319-070	PANEL-UNDERSEAT,LH,BLK	1
3	5456320-070	PANEL-UNDERSEAT,RH,BLK	1
4	7519650	SCR-TXTH-M6X1.0X25 ZFB	6
5	7081305	CLIP-U SPEED NUT	6
6	7661855	RIVET-TUFLOK,.315-.325X.787	3

Copyright 1996-2026 Polaris Industries U.S.A All rights reserved.